ESD

Reeco

ESD Workstations

Matronic
ELECTRONIC PRODUCTION TECHNOLOGY

Matronic i Sverige AB 08- 556 291 00 info@matronic.se matronic.se

CONTENTS

ABOUT REECO	3
ESD PROTECTION	5
ERGONOMICS	6
MODULARITY	7
PREMIUM TABLE FRAME	8 - 9
PREMIUM ELECTRICALLY ADJUSTABLE TABLE FRAME	10 - 11
CLASSIC TABLE FRAME	12 - 13
PREMIUM CORNER MODULE	14 - 15
CLASSIC SIDE AND CORNER MODULE	16 - 17
ANTI-VIBRATION TABLE	18 - 19
MOVABLE ESD UPRIGHT FRAME	20 - 21
ERGONOMIC TABLE TOP	22 - 23
RECTANGULAR TABLE TOP	24 - 25
PERFORATED UPRIGHT FRAME	26 - 27
UPPER SHELF FOR PREMIUM/CLASSIC FRAME	28 - 29
LIGHT AND BALANCER RAIL	30 -31
LED LIGHTING	32 - 33
MODULAR STORAGE SYSTEMS	34 - 35
ROLLER ESD TRANSPORT SYSTEMS	36 - 37
RACK 19" 6HU ESD CABINETS	38 - 39
ACCESSORIES FOR RACK 19" CABINETS	40 - 41
ACCESSORIES	42 - 52
ESD CHAIRS	53 - 54
IMPLEMENTATION EXAMPLES	55 - 57
SAMPLE CONFIGURATIONS	58 - 61

ABOUT REECO

30 YEARS OF EXPERIENCE

Over the years our employees have turned into the top class professionals.

Numerous training courses allowed us to implement the most modern solutions, patterns and designs of our products. We were also able to achieve it because of our efficiency and staff engagement.

5 BRANCHES IN EUROPE

We provide innovative customer relationship management solutions.

All of our branches across Europe are equipped with DEMO ROOM, where we can prove the effectiveness of our products.

1600 m² WAREHOUSE AREA

Our logistic and warehouse personnel is always equipped with sufficient knowledge about the status and realization stage of each order.
Our warehouse staff enables us to deliver orders promptly and directly to you.

PRIZES AND AWARDS

Since the very beginning we make tremendous effort to make sure, that our customers and REECO users are able to make use of our products for extensive period of time.

Our brand's quality got proven by numerous awards.

For example the MAIN PRIZE in 2015 DOBRY WZÓR (GREAT DESIGN) contest organized by Institute of Industrial Design. Moreover, we were given a credit of satisfaction from our customers - such appreciation is the best award.

FAIRS AND CONFERENCES

We are advertising and promoting our products during various domestic and foreign conferences and fairs. You can meet us at Automaticon, Productronica, Motek and TIB.

Wherever we meet, our employees will be happy to support you including presentation and detailed discussion.

5 YEAR WARRANTY

ALL PRODUCTS INCLUDED IN THIS CATALOGUE
ARE COVERED BY 5 YEAR WARRANTY PERIOD

PROFESSIONAL INSTALLATION

WE OFFER PROFESSIONAL INSTALLATION
FOR BOTH DOMESTIC AND INTERNATIONAL CLIENTS

24H SHIPPING

MOST ITEMS CAN BE SHIPPED
WITHIN 24 HOURS

FREE TECHNICAL CONSULTANCY

OUR TECHNICAL-SALES REPRESENTATIVES PROVIDE
FREE OF CHARGE CONSULTANCY AT CLIENT'S SITE

ESD PROTECTION

ESD protection is crucial for electronics industry. We have extensive experience in developing, manufacturing and supplying ESD furniture.

ESD Stands for Electrostatic Discharge. Static electricity is an imbalance of electric charges within or on the surface of a material.

The charge remains until it is able to move away by means of an electric current or electrical discharge.

Normally, electric charges are discharged slowly from surface of objects. However, if the difference in electric potential becomes too great the electrical current accelerates resulting in a sudden current surge.

An ESD protected area is called EPA. In an EPA area ESD protection must be observed in all materials, employees' clothing and air humidity.

Workstations and employees in an EPA area must also be grounded with protective resistance (1 Mohm) to an ESD ground. ESD protection ensures safe working environment. In electronics industry, work is often carried out in an EPA area, that is protected from static discharge.

Protection in this case means effective grounding, which involves both grounding equipment and painting the frame of the ESD workstation with semi-conductive paint.

We have extensive experience in developing, manufacturing and supplying ESD furnishings. All our workstations and related products are supplied with an electrically semi-conducting coat of paint and we supply furnishings, seats and grounding components for ESD-protected workstations.

Our products meet the requirements specified in the PN- EN-61340-5-1:2009 standard.

ERGONOMICS

Human being is the most important element of every working environment. An employee cannot successfully perform his duties, unless the work surroundings are adjusted to specific psychophysical characteristics.

Therefore, the issue of ergonomics needs to be considered a priority and incorporate a whole range of human psychophysical activities.

ERGONOMICS = EFFICIENT AND SAFE WORK

Main ideas of ergonomics refer to employee's health (the elimination of occupational diseases), job satisfaction development and a maximal increase in productivity.

Modularity of Reeco furniture, a wide range of components and a variety of accessories enable an easy implementation of ergonomics in the workplace.

EVERYTHING IS AT YOUR FINGERTIPS

Our work stations are designed in such a way as to provide an optimal height of table tops and shelves, which are equipped with a set of essential accessories. A well though-out design imposes a correct adjustment and positioning of tools and equipment.

A workplace station, where all tools are within the user's immediate reach, is a great benefit for the company, which saves valuable time and ensures safety and order.

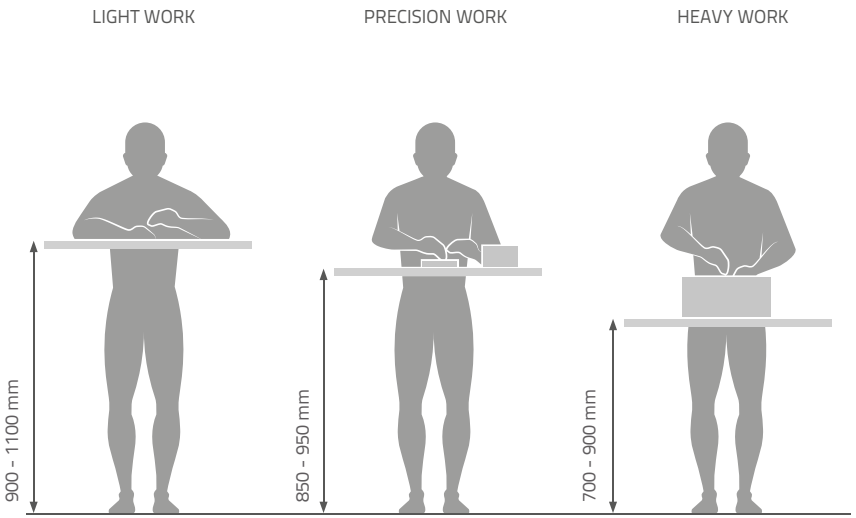

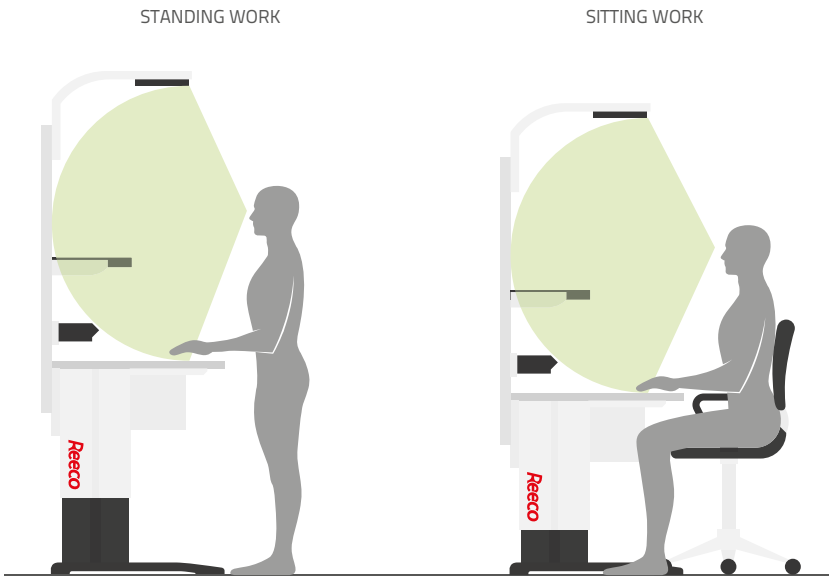

MODULARITY

One of the most important advantages of REECO furniture is its modularity. Modular construction of REECO furniture divides the whole system into interchangeable units (modules), which are produced and sold independently.

These individual elements can also be used in other modular systems of industrial furniture.

With the possibility of a flexible development, REECO furniture can be used in many branches of industry,and in places like storehouses, production lines, workshops, tool shops, laboratories and lecture rooms.

Moreover, there is an option of exclusive designs for individual companies and of their subsequent extensions, which arise with the customer's expanding needs.

We have also prepared ready-made workstations, whose configurations provide for typical customer's needs (pages 58-61).

ERGONOMICS AND MODULARITY
FOR BETTER FUNCTIONALITY

Reeco

PREMIUM TABLE FRAME

PREMIUM TABLE FRAME was designed for industries where ergonomics and comfort play special role and are crucial for workers performance.

This construction can be easily adapted to operator's needs according to performed activity (sitting or standing type of work).

- Max load capacity: 600 kg
- Height adjustment: 670 -1120 mm
- Type of height adjustment: stepless (internal rail)
- Type of height adjustment lock: 4 screws per leg
- Leveling feet
- Applicable table top: rectangular, ergonomic
- Metal cast foot for increased stability

PREMIUM TABLE FRAME - DIMENSIONS (MM)

Catalogue number	Width	Depth	Height
RF-001-12075-9003	1200	750	670 - 1120
RF-001-15375-9003	1530	750	670 - 1120
RF-001-18375-9003	1830	750	670 - 1120

Reeco

PREMIUM ELECTRICALLY ADJUSTABLE TABLE FRAME

PREMIUM ELECTRICALLY ADJUSTABLE TABLE FRAME has been equipped with electric actuators for adjusting the height of the table top. Modern top lifting columns have a high load capacity and very low power consumption, at 0.1W, in standby mode.

- Compliant with EN 60335-1 standard
- Smooth starting and stopping provided by the control box
- Low noise level
- Maximum power: 1600 N (per leg)
- Maximum speed: 43 mm/s (at no load)
- Power supply: 24 V (AC adapter included)
- Smartphone application for height adjustment via Bluetooth

PREMIUM ELECTRIC TABLE FRAME - DIMENSIONS (MM)

Catalogue number	Width	Depth	Height
RF-001-12075-9003-M	1200	750	740 - 1240
RF-001-15375-9003-M	1530	750	740 - 1240
RF-001-18375-9003-M	1830	750	740 - 1240

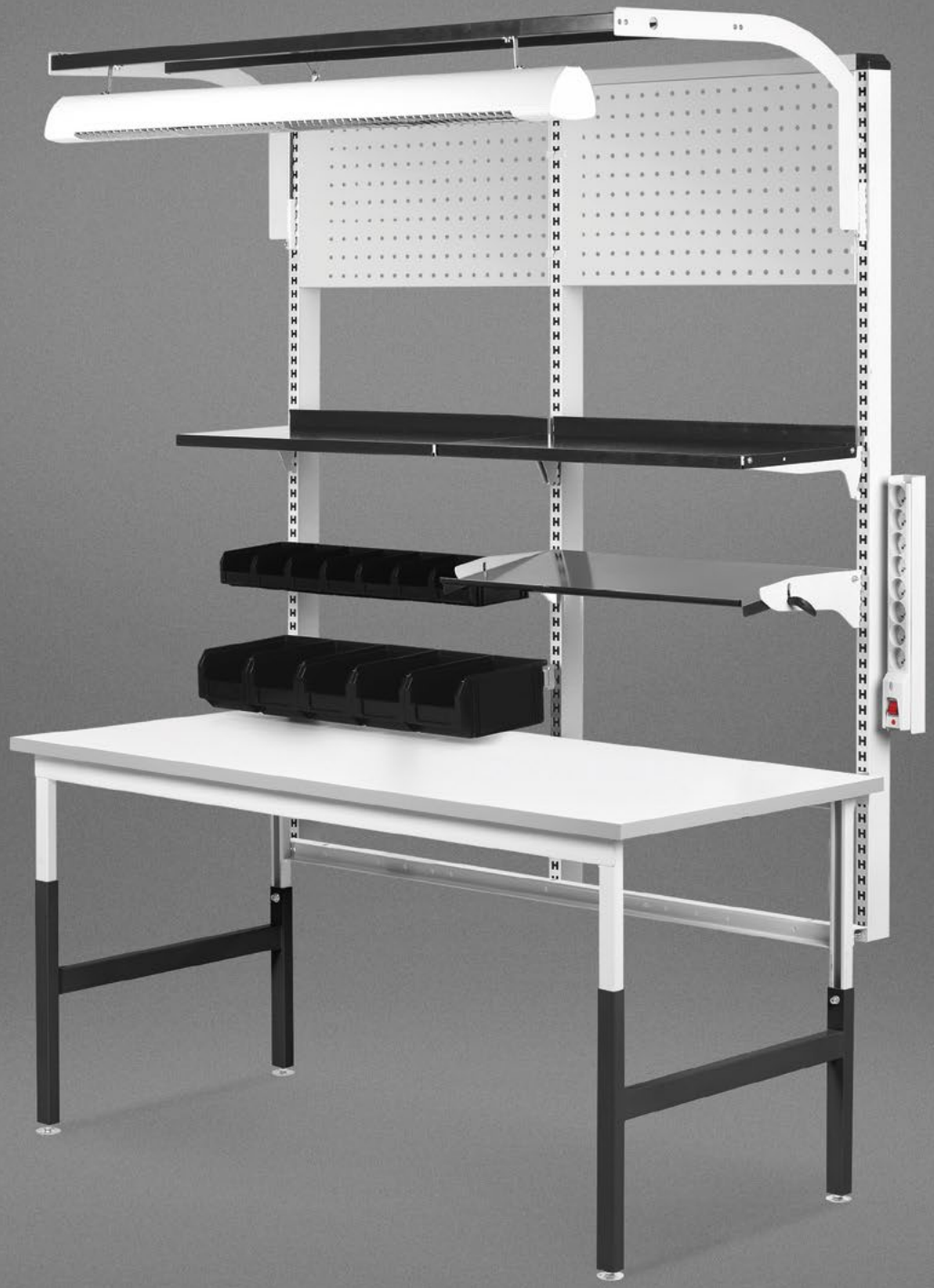

CLASSIC TABLE FRAME

CLASSIC TABLE FRAME is cost-efficient solution designed for wide range of tasks.

- Max load capacity: 300 kg
- Height adjustment: 670 - 1120 mm
- Type of height adjustment: stepless (internal rail)
- Type of height locking: 2 screws per leg
- Leveling feet
- Applicable table top: rectangular, ergonomic

CLASSIC TABLE FRAME- DIMENSIONS (MM)

Catalogue number	Width	Depth	Height
RF-002-12075-9003	1200	750	670 - 1120
RF-002-15375-9003	1530	750	670 - 1120
RF-002-18375-9003	1830	750	670 - 1120

Reeco
Reeco

PREMIUM CORNER MODULE

Corner module provides the ability to connect two Premium tables. As a result users obtain one integrated workstation contributing to improvement of space management.

Corner modul available in one size.

PREMIUM CORNER MODULE - DIMENSIONS (MM)

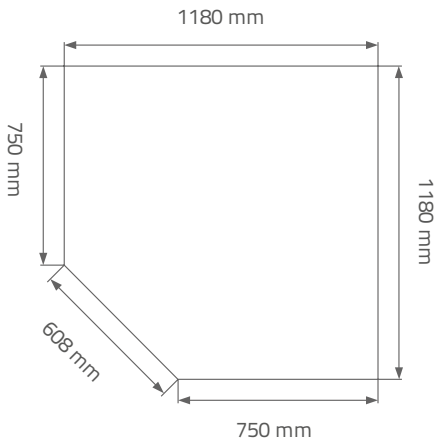

- Comes together with ESD table top
- Max load capacity: 100 kg
- Stepless height adjustment: 670 - 1120 mm
- Additional suporting leg provided as an option for higher load capacity

Catalogue number
RF-003P-11860-9003

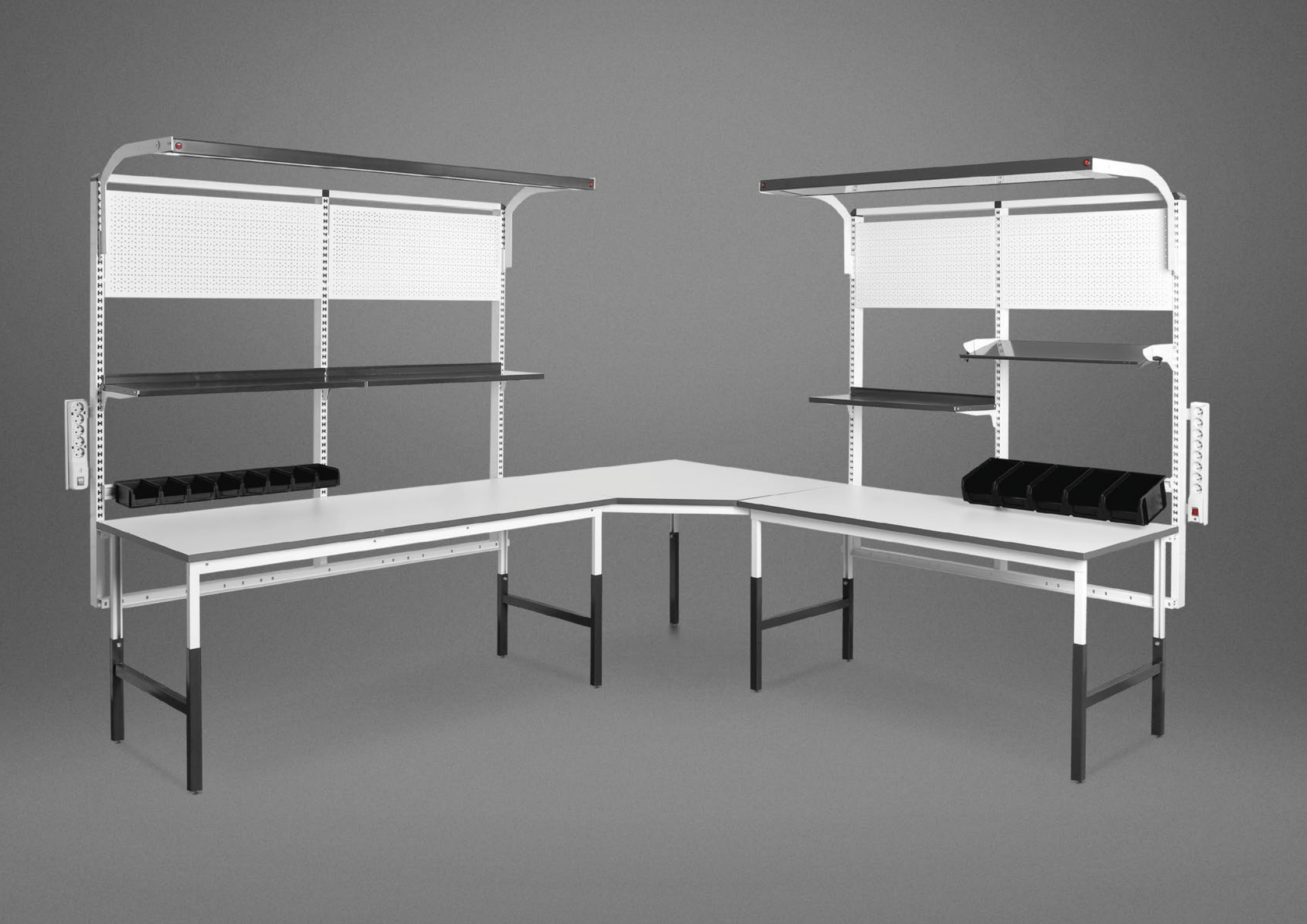

CLASSIC SIDE AND CORNER MODULE

CLASSIC SIDE MODULE

- Comes together with ESD table top
- The ideal solution for increasing the working space
- Maximum load capacity: 100 kg
- Attachable to both left and right side
- Quick installation - main table top removal not needed

CLASSIC SIDE MODULE - DIMENSIONS (MM)

Catalogue number	Width	Depth
RF-003-12075B-9003	1200	750
RF-003-15375B-9003	1530	750

TABLE TOP FOR CLASSIC SIDE FRAME - DIMENSIONS (MM)

CLASSIC CORNER MODULE

- Comes together with ESD table top
- Maximum load capacity: 100 kg

Corner module provides the ability to connect two CLASSIC tables.

As a result users obtain one integrated workstation contributing to improvement of space management. Corner module comes in one size and consists of both frame and table top.

Corner modul available in one size.

CLASSIC CORNER MODULE - DIMENSIONS (MM)

Catalogue number
RF-003C-11860-9003

TABLE TOP FOR CLASSIC CORNER FRAME - DIMENSIONS (MM)

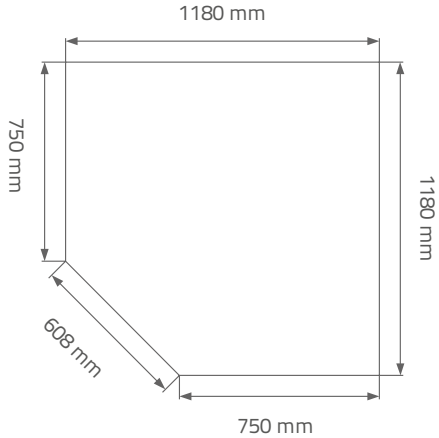

ANTI-VIBRATION TABLE

Anti-vibration table is an essential element of every laboratory. In order to ensure consistent and proper operation of scales microscopes and measuring devices they are placed on a specially designed granite plate.

All types of vibration that may affect the operation of the devices (generated by other devices in a laboratory or transmitted through the floor) is eliminated thanks to vibroisolators on which the plate is mounted.

- Height adjustment range: 670 - 1120 mm
- Max load capacity of granite plate: 40 - 100 kg
- Antistatic design table - CLASSIC version (page 13)
- 4 robust vibroisolators
- Two-layer board made of polished granite
- Standrard sizes of granite board: 500 x 500 mm
- Different sizes of granite board applicable

ANTI-VIBRATION TABLE - DIMENSIONS (MM)

Catalogue number	Width	Depth
RF-030-15375-9003	1530	750
RF-030-18375-9003	1830	750

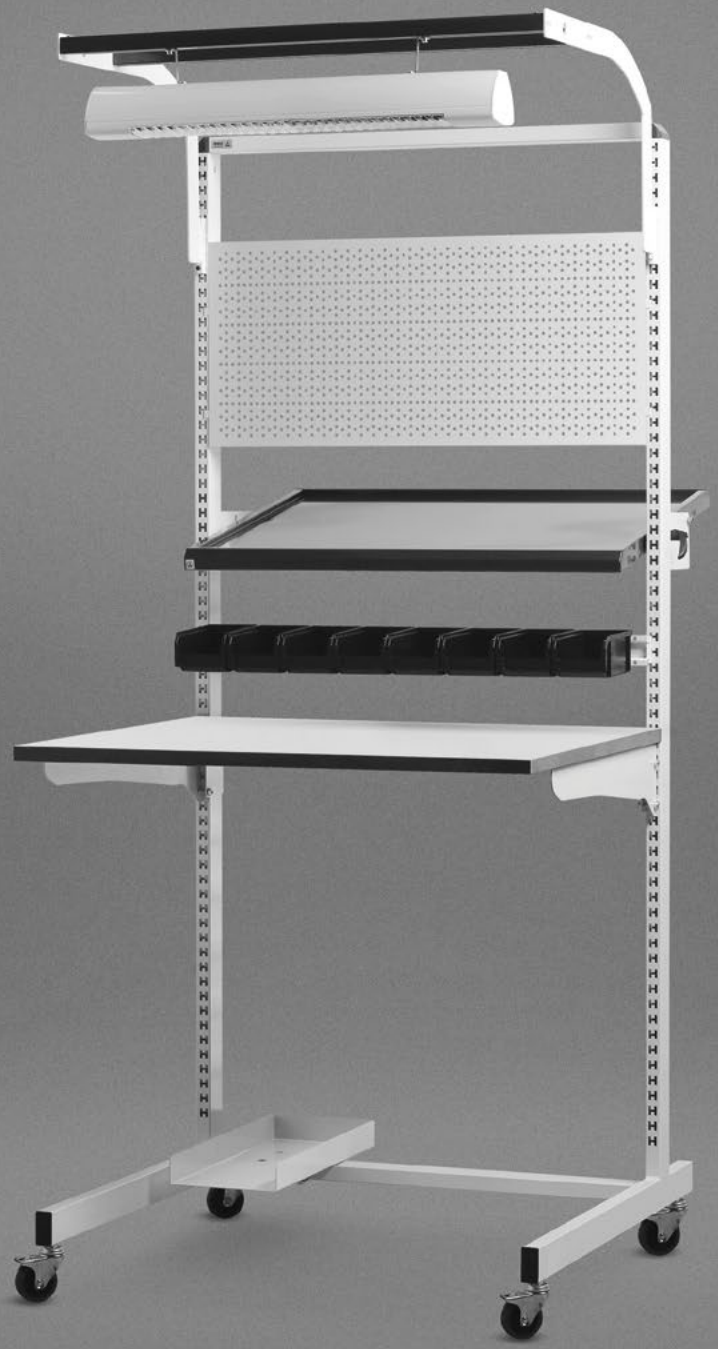

MOVABLE ESD UPRIGHT FRAME

Movable ESD upright frame is ideal for manufacturing facilities, workshops, laboratories, and all these places where mobility is required for fast moving of parts and tools. Thanks to modular design all 900 mm accessories are applicable.

MOVABLE FRAME

- 4 x 75 mm swivel castors - 2 with braking systems
- 2 horizontal bars for better stability
- CPU holder
- External dimensions (w/o wheels): 900 x 1860 mm

TABLE TOP FOR MOVABLE FRAME

- Colour: RAL 7036
- Outer layer: scratch and moist resistant ESD laminate
- Core: conductive, moist resistant

TABLE TOP FOR MOVABLE FRAME - DIMENSIONS (MM)

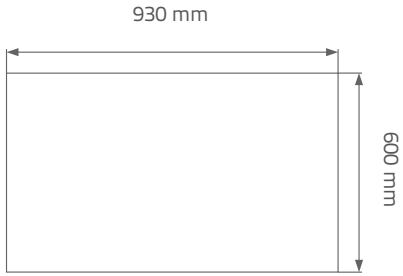

MOVABLE FRAME - DIMENSIONS (MM)

Catalogue number	Height	Table top width	Table top depth
RF-098-20090-9003	2000	930	600

ERGONOMIC TABLE TOP

Table top is an essential element for the whole structure of the table. The distinguishing feature of REECO furniture is the ergonomic table top-unique solution to increase ergonomics of workstation.

Table top is covered with a conductive laminate on both sides (top and bottom layer). The edges are finished with scratch-and impact-resistant ABS material.

Thanks to threaded bushings on bottom side of the table top, installation to Premium or Classic frame is quick and easy.

Core of the table top is composed of resin and chipboard for robustness even under heavy loads.

As a result of using the conductive core, table top provides protection against ESD throughout its structure.

- Colour: RAL 7036
- Outer surface: conductive laminate, moisture and scratch resistant
- Core: conductive, moisture resistant
- Fixing to frame: threaded bushings

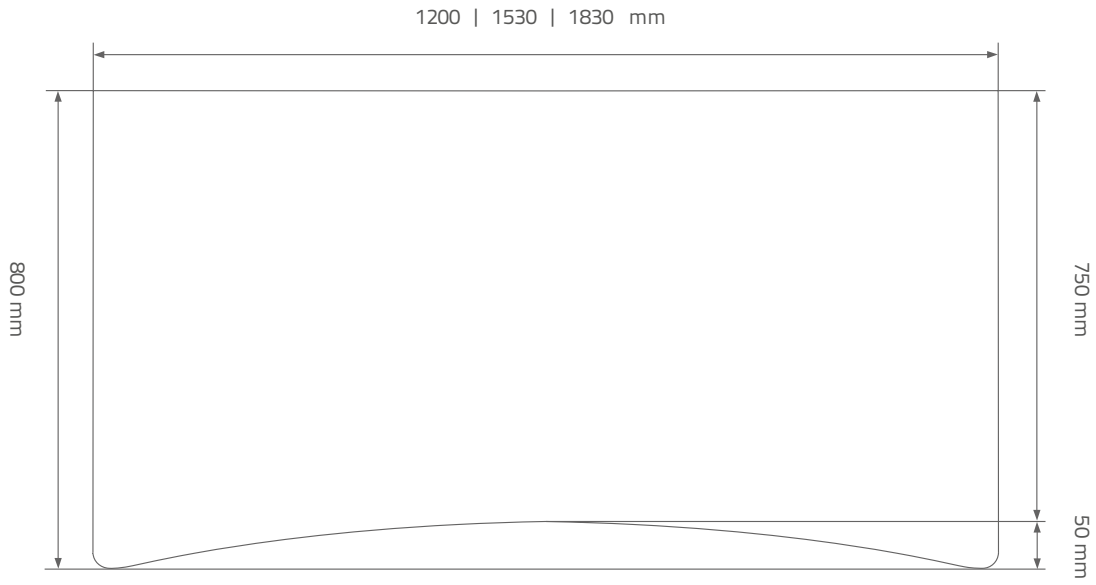

ERGONOMIC TABLE TOP - DIMENSIONS (MM)

Catalogue number	Width	Depth	Thickness
RF-005-12075-7036	1200	750 - 800	25
RF-005-15375-7036	1530	750 - 800	25
RF-005-18375-7036	1830	750 - 800	25

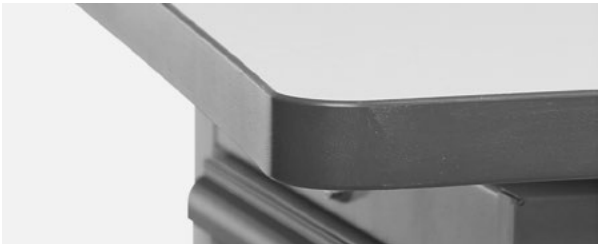

RECTANGULAR TABLE TOP

Table top is covered with a conductive laminate.
Edges are finished with scratch resistant and impact resistant ABS plastic. Easy fixing to the frame using threaded bushings.

Structure of the table top, which is composed of resin and chipboard guarantees strength even at high loads.

As a result of using a conductive core, table top over its entire surface provides protection against ESD.

- Colour: RAL 7036
- Top layer: conductive laminate, increased resistance to moisture and scratches (only table top with conductive laminate)
- Core: conductive, resistant to moisture
- Fixing to frame: threaded bushings

RECTANGULAR TABLE TOP - DIMENSIONS (MM)

Catalogue number	Width	Depth	Thickness
RF-004-12075-7036	1200	750	25
RF-004-15375-7036	1530	750	25
RF-004-18375-7036	1830	750	25

PERFORATED UPRIGHT FRAME

Perforated vertical frame is one of the basic elements.

Accessories such as shelves, suspension rails with plastic containers, perforated panels are mounted on the frame.

Perforation allows the placement of accessories at any height. The frame is available in three standard widths.

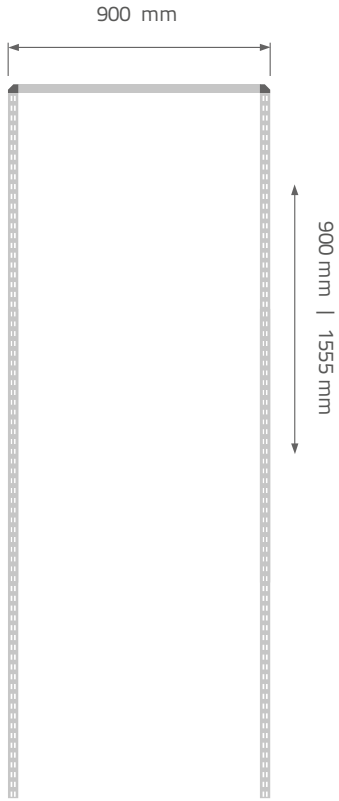

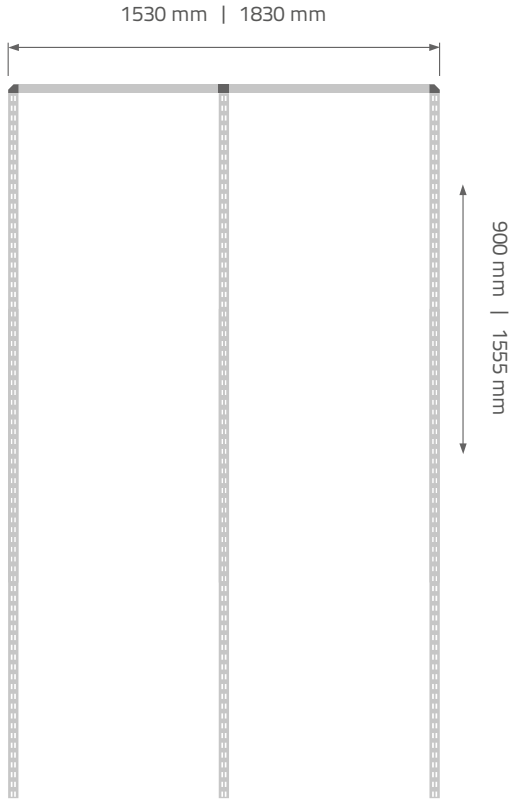

PERFORATED UPRIGHT FRAME (SHORT) - DIMENSIONS (MM)

Catalogue number	Width	Height
RF-008-09009-9003	900	900
RF-008-27509-9003	1530	900
RF-008-29009-9003	1830	900

PERFORATED UPRIGHT FRAME (HIGH) - DIMENSIONS (MM)

Catalogue number	Width	Height
RF-008-0900-9003	900	1555
RF-008-2750-9003	1530	1555
RF-008-2900-9003	1830	1555

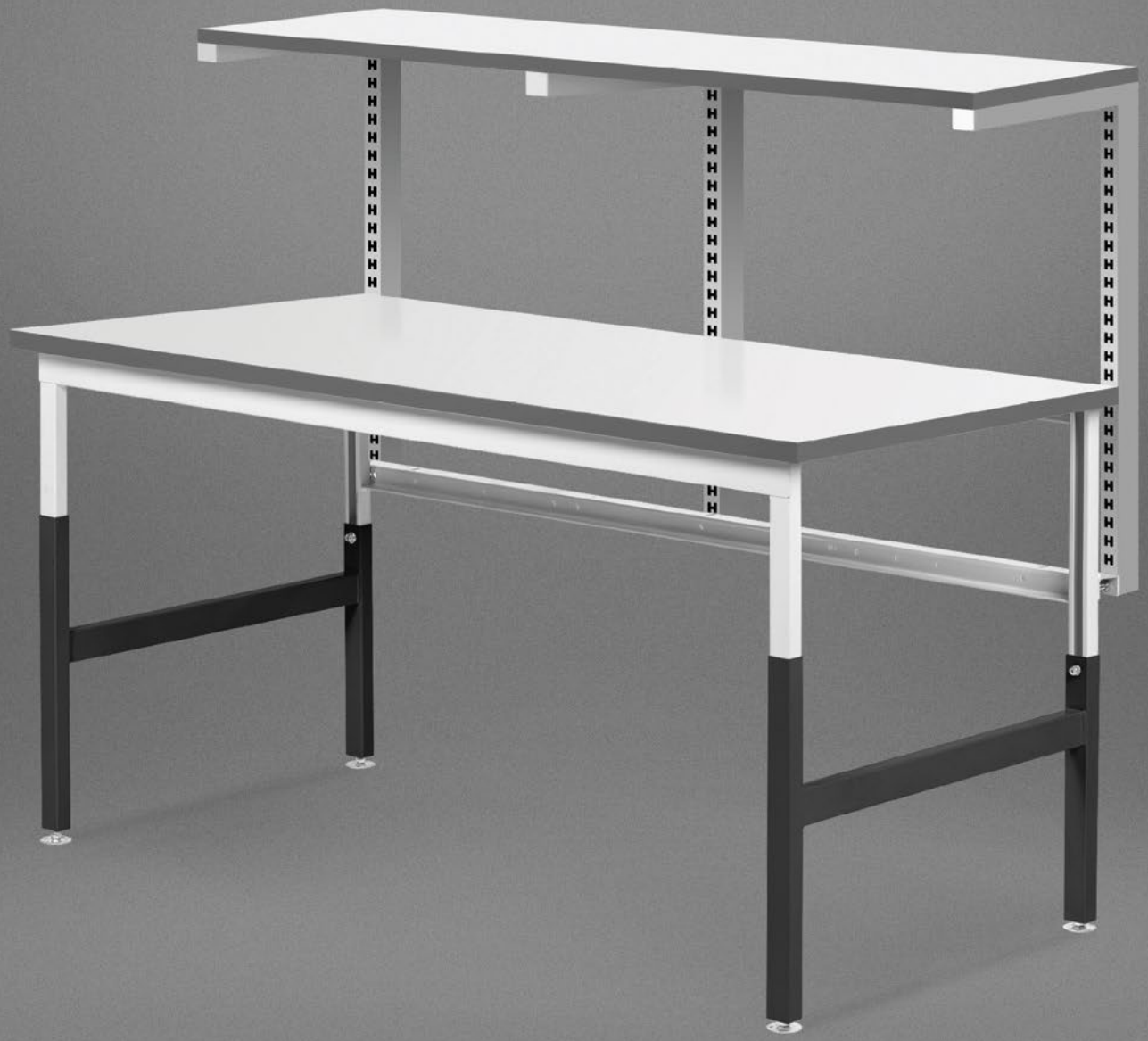

UPPER SHELF FOR PREMIUM/CLASSIC FRAME

UPPER SHELF FRAME

- Convenient additional surface for tool and other equipment placement
- Bending resistant thanks to supporting bars

TABLE TOP

- Outer layer: scratch and moist resistant ESD laminate
- Core: conductive, moist resistant
- Installation: metal bushings

TABLE TOP FOR UPPER SHELF - DIMENSIONS (MM)

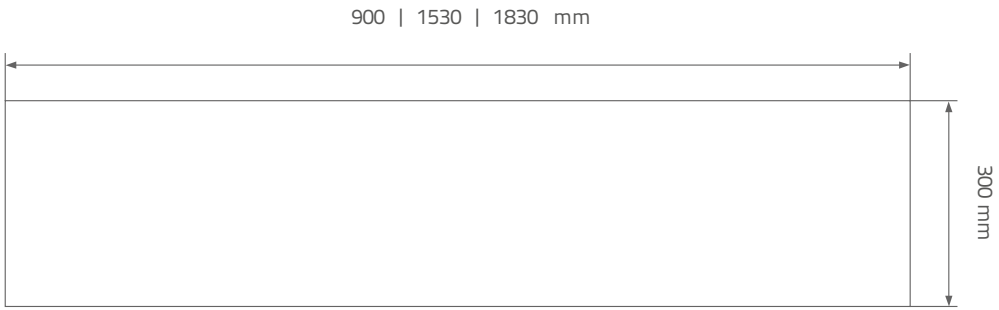

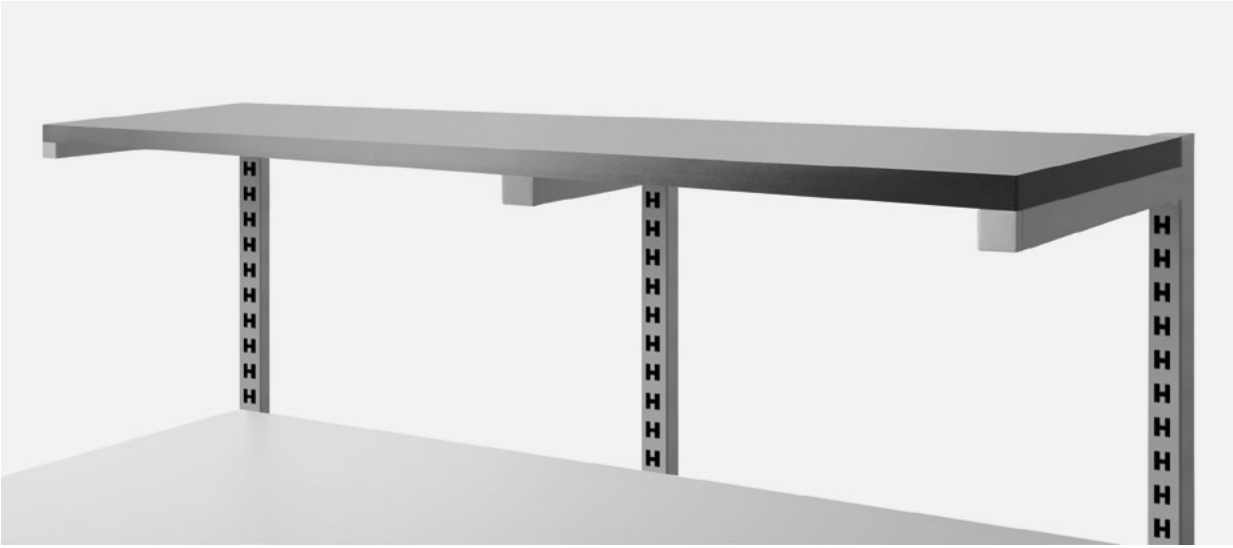

UPPER SHELF WITH TABLE TOP - DIMENSIONS (MM)

Catalogue number	Width	Depth
RF-007-12030-7036	900	300
RF-007-15330-7036	1530	300
RF-007-18330-7036	1830	300

LIGHT AND BALANCER RAIL

Another useful accessory is lamp and balancer rail.
Lamp and balancer rail is mounted on upright frame.

Thanks to perforation of upright frame it can be installed at virtually any height above table top.

LAMP BRACKET

Lighting and balancer rail is dedicated to LED lamp installation. Thanks to its design it provides easy vertical adjustment of the light beam.

LIGHT AND BALANCER RAIL

Lamp and balancer rail is mounted on upright frame. Thanks to perforation of upright frame it can be installed at virtually any height above table top.

AVAILABLE OPTIONS:

- RAIL + RAIL
- LED LAMP + RAIL

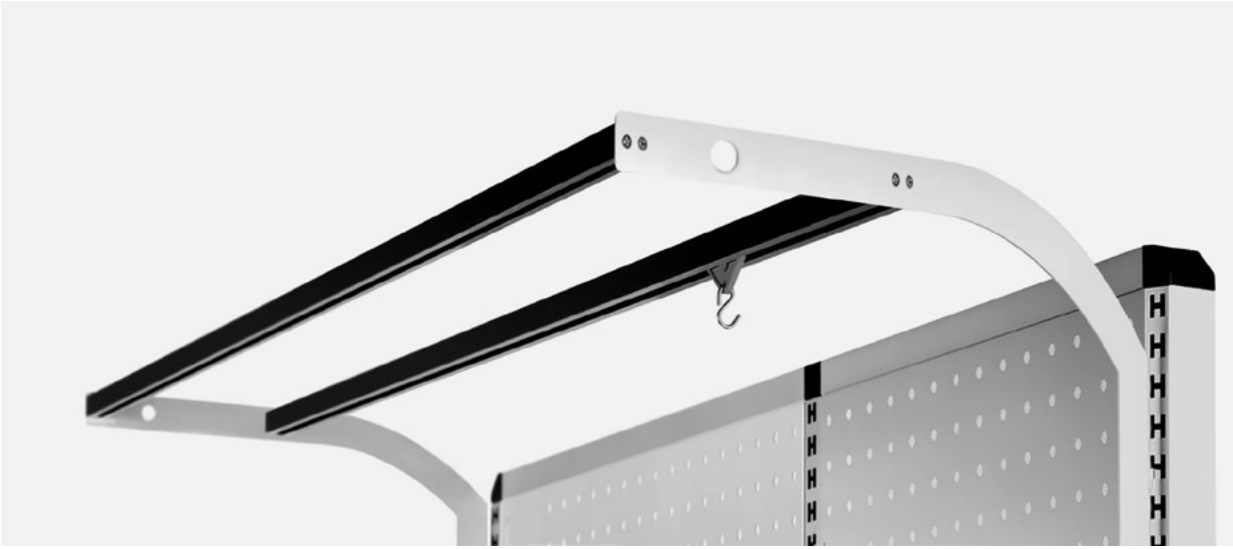

LIGHT AND BALANCER RAIL - DIMENSIONS (MM)

Catalogue number	Width
RF-009-0900-9003	900
RF-009-2750-9003	1500
RF-009-2900-9003	1800

LED LIGHTING

REECO lamps through the use of LEDs are characterized by low energy consumption and longer life span.

Ergonomic LED lighting has been designed in accordance with European EN12464-1 standard.

The light emitted does not cause eyestrain and glares.

- Color temperature: 5700K
- Luminous efficacy: 105 lm/W

LED LIGHTING (SINGLE) - DIMENSIONS (MM)

Catalogue number	Width	Power (W)
RF-015-0900-7021	900	60
RF-015-0900-7021-SL	900	48
RF-015-1500-7021-SL	1500	60
RF-015-1800-7021-SL	1800	48

SL - SLIM type lamp

- 1500 and 1800 LED lamps consist of two zones that can be lit independently creating either shadow free or 3D effect

LED LIGHTING (DUAL) - DIMENSIONS (MM)

Catalogue number	Width	Power (W)
RF-015-1500-7021	1500 (3D)	120
RF-015-1800-7021	1800 (3D)	140

MODULAR STORAGE SYSTEMS

Reeco offers modular storage systems. Modularity means that the entire storage system can be easily expanded or modified by adding or exchanging several basic components.

The construction of cabinets and shelves is based on the perforated frames allowing for quick and easy upgrades. Inside there are supports ensuring high stability even at high loads.

You can easily create versatile storage solution by customizing it to suit your needs. Simply choose appropriate accessories and position them at desired height.

ACCESSORIES COMPATIBLE WITH RACKS AND CABINETS:

- 1000 x 400 mm shelves
- Perforated panels
- Drawers (Optional)

PLEASE CONTACT OUR SALES REPRESENTATIVE IN ORDER TO RECEIVE QUOTATION OF SOLUTION CUSTOMIZED TO YOUR NEEDS

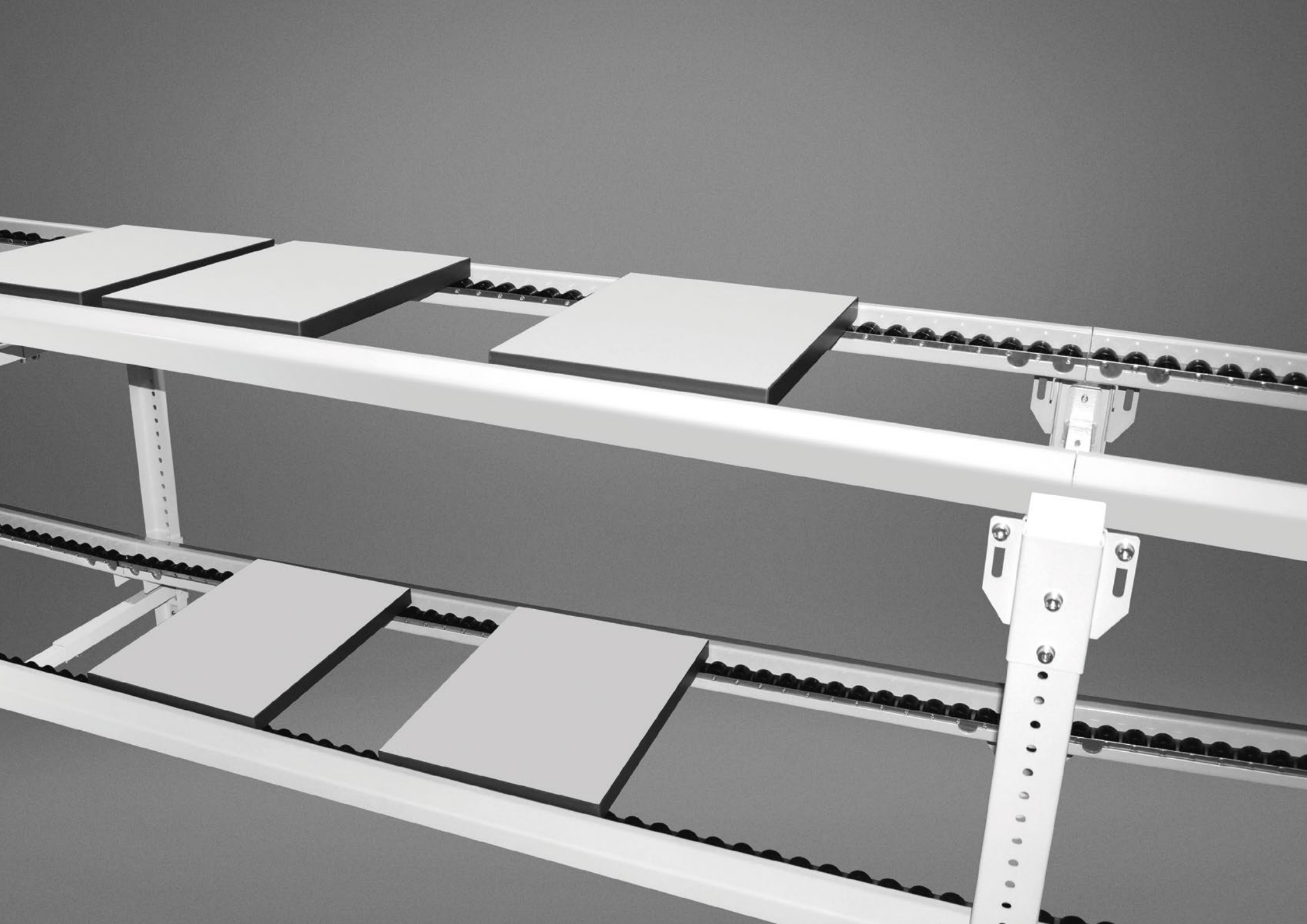

ROLLER ESD TRANSPORT SYSTEMS

Thanks to the modularity of REECO ROLLER TRANSPORT SYSTEMS it is possible to adopt the system to many production process taking into account subsequent production phases.

ADVANTAGES

- Stable and rigid construction
- Possibility of connecting with other transport systems
- Height and angle adjustment of upper and lower transport pallets
- Possibility of integration with workplaces

INDIVIDUAL SOLUTIONS

To ensure work ergonomics, it is necessary to design hall project with planned transportation system.

Considering such necessity, at design stage, we offer tailor the system to application, weight and dimensions of goods and characteristics of environment.

WE SPECIALIZE IN CREATING AND IMPLEMENTING SOLUTIONS FOR ELECTRONICS INDUSTRY

Electronic industry has large number of small components, requiring precision transport and short production cycle.

For these reasons, production lines should be optimally configured. Therefore, project includes not only production phases, but also inspection and service stands as well as specific storage requirements of product sensitive to electrostatic discharges (ESD).

SYSTEM MODULES - DIMENSIONS (MM)

Catalogue number	Module	Length
RF-029-ML-H	Start/Stop	1500
RF-029-HP1500	Extending	1500
RF-029-HP2000	Extending	2000
RF-029-HP2500	Extending	2500

ESD PALLETS - DIMENSIONS (MM)

Catalogue number	Width	Length
RF-006-3030-7036	300	300
RF-006-4040-7036	400	400
RF-006-6060-7036	600	600

WYL. GŁ.

RACK 19" 6HU ESD CABINETS

RACK cabinets enable easy and fast construction of a measuring station at every workplace.

They are designed for mounting of equipment with housing in 19" 6HU standard. They are ideal security of headends prior to mechanical damage.

- 10 profiles RACK with possibility of position adjustment
- Cabinet mounting on two tilted brackets - adjustable possibility of position adjustment relative to a table top
- Detachable back cover divided into 3 parts
- Cable duct in the lower wall on whole cabinet width
- Ventilation openings in the upper and lower wall
- Safety module in the right segment of the cabinet equipped in safety button, RCD fuse 16A 30mA AC, 4 overcurrent switches S301 B16 and 3x10 mm^2 strip
- 4 external socket 230V/16A on the back of the safety module
- 230V/16A power cord 3 m length
- 2 grounding points
- Whole construction protected against ESD
- 1 end cup 2WU width and 2 end cups 1WU width
- Self assembly cabinet, delivered in one package

RACK 19" 6HU ESD CABINETS - DIMENSIONS (MM)

Catalogue number	Width	Depth	Height
RF-022-1209-9003	1200	340	350
RF-022-1509-9003	1500	340	350
RF-022-1809-9003	1800	340	350

SAFETY MODULE

EXTERNAL SOCKETS 230V/16A

ACCESSORIES FOR RACK CABINETS

ADJUSTABLE LABORATORY POWER SUPPLY DC 6U155

Power supply with smooth regulation of voltage in range of 0-30V with possibility of current adjustment in range of 0.1-4A. Adjustable part of power supply is equipped in digital voltage and current displays. Equipped in temperature sensors with fans.

POWER SUPPLY VOLTAGE:	230V / 50HZ
ADJUSTABLE VOLTAGE:	1 X 0 - 30V
ADJUSTABLE CURRENT:	1 X 0 - 4A
CONSTANT VOLTAGE:	1 X 5V
CONSTANT CURRENT:	1 X 3A
WIDTH:	180 mm

Catalogue number
RF-DC-6U155

ADJUSTABLE LABORATORY POWER SUPPLY DC 6U1541

Power supply equipped in two channels with smooth regulation of voltage in range of 0-40V. Has one 5 V/3A DC voltage output. Single power supply outputs are equipped in illumination signalling work of power supply.

POWER SUPPLY VOLTAGE:	230V / 50HZ
ADJUSTABLE VOLTAGE:	2 X 0 - 40V
ADJUSTABLE CURRENT:	2 X 0 - 3A
CONSTANT VOLTAGE:	1 X 5V
CONSTANT CURRENT:	1 X 3A
WIDTH:	240 mm

Catalogue number
RF-DC-6U1541

3F 6U1525 MODULE

Model with three phase 16A socket, switch and three control lamps. Module has self protection with three phase 10A fuse (16A optional).

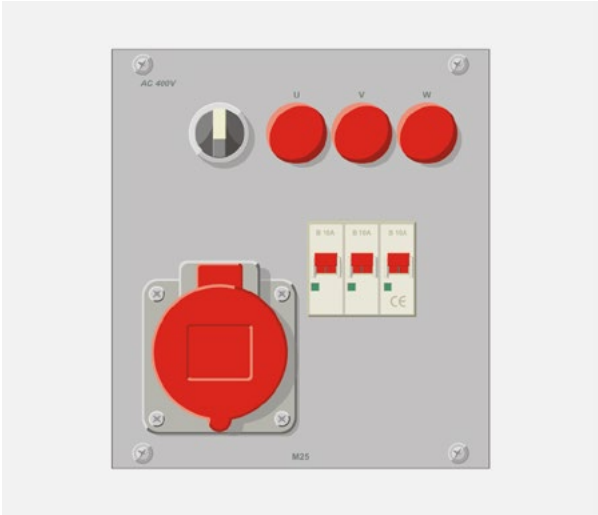

MAX. CURRENT:	10A / (16A - OPTION)
MAX. VOLTAGE:	3 X 400V
FUSE:	B10A (B16A – OPTION)
WIDTH:	180 mm

Catalogue number
RF-3F-6U1525

Reeco.info

ACCESSORIES FOR RACK CABINETS

DIGITAL MULTIMETER 6U1526

Measurement: AC voltage, DC dual channel voltage, AC current, DC current, resistance, capacity, temperature, frequency, inductance, diode test, thyristors test.

AC VOLTAGE:	0,4; 4; 40; 400; 700 V
DC VOLTAGE:	0,4; 4; 40; 400; 1000 V
AC CURRENT:	0,04; 0,4; 10A
DC CURRENT:	0,004; 0,4; 10A
WIDTH:	120 mm

Catalogue number
RF-6U1526

DUAL CHANNEL OSCILLOSCOPE 100 MHZ 6U1558

Digital two-channel oscilloscope with sampling rate 500 MS/s and colour 8"LCD display. 20 automatic measurements enables on fast and accurate determining parameters of signal. Equipped in USB port.

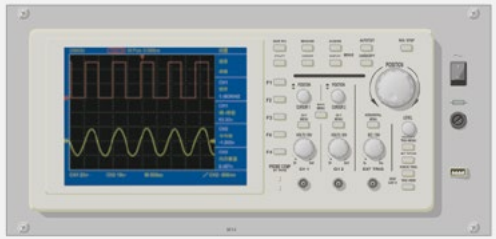

INPUT COUPLING:	AC, DC, GND
INPUT IMPEDANCE:	1 MΩ PARALLEL WITH 15 PF
MAX INPUT VOLTAGE:	300 V PEAK-PEAK
RECORD LENGTH:	6000 PPC
WIDTH:	420 mm

Catalogue number
RF-6U1558

THREE-PHASE AUTOTRANSFORMER 6U1551

Equipped in one three phase regulator of voltage, adjustable in range of 3 x < 5 - 230V with max. 2A current intensity.

POWER SUPPLY VOLTAGE:	3 X 230 V/50 HZ
OUTPUT VOLTAGE:	3 X <5 - 230 V
MAX OUTPUT CURRENT:	3 X 2 A
WIDTH:	240 mm

Catalogue number
RF- 6U1551

Ree

ACCESSORIES

STANDARD SHELF

The design enables for installation at an angle of 90° or 60° relative to a perforated vertical frame.

STANDARD SHELF - DIMENSIONS (MM)

Catalogue number	Width	Depth
RF-010-0750-7021	750	300
RF-010-0900-7021	900	300

ADJUSTABLE SHELF

The design enables for smooth adjustment of an angle in range of 90° - 60° relative to a perforated vertical frame.

ADJUSTABLE SHELF - DIMENSIONS (MM)

Catalogue number	Width	Depth
RF-011-0750-7021	750	300
RF-011-0900-7021	900	300

ADJUSTABLE REINFORCED SHELF

The design allows for smooth adjustment of an angle in range of 90° - 60° relative to a perforated vertical frame.
Enables you to store heavy equipment.

ADJUSTABLE REINFORCED SHELF - DIMENSIONS (MM)

Catalogue number	Width	Depth
RF-0110-0750-7021	750	500
RF-0110-0900-7021	900	600

ACCESSORIES

STANDARD STEEL SHELF - ILLUMINATED

The design enables for installation at an angle of 90° or 60° relative to a perforated vertical frame.

ADJUSTABLE SHELF - ILLUMINATED

The design enables for smooth adjustment of an angle in range of 90° - 60° relative to a perforated vertical frame.

KEYBOARD TRAY

Mounted under tabletop enables to gain additional usable space, and also puts the keyboard at the correct height.

STANDARD STEEL SHELF - ILLUMINATED - DIMENSIONS (MM)

Catalogue number	Width	Depth	Power (W)
RF-017P-0750-7021	750	300	40
RF-017P-0900-7021	900	300	40

ADJUSTABLE SHELF - ILLUMINATED - DIMENSIONS (MM)

Catalogue number	Width	Depth	Power (W)
RF-017-0750-LED-7021	750	300	40
RF-017-0900-LED-7021	900	300	40

KEYBOARD TRAY - DIMENSIONS (MM)

Catalogue number	Width	Depth	Height
RF-025-KEY	Overall dimensions		
	680	380	120
	Tray dimensions		
	595	310	30

Reeco.info

ACCESSORIES

PLASTIC CONTAINERS

Plastic containers are ideal for storing small elements like: components, screws, nuts, seals, etc.

SUSPENSION RAIL

Its width should be chosen in accordance with the width of used perforated frame.

PERFORATED PANEL

When equipped with suitable hooks, they constitute a practical storage place for various tools and equipment.

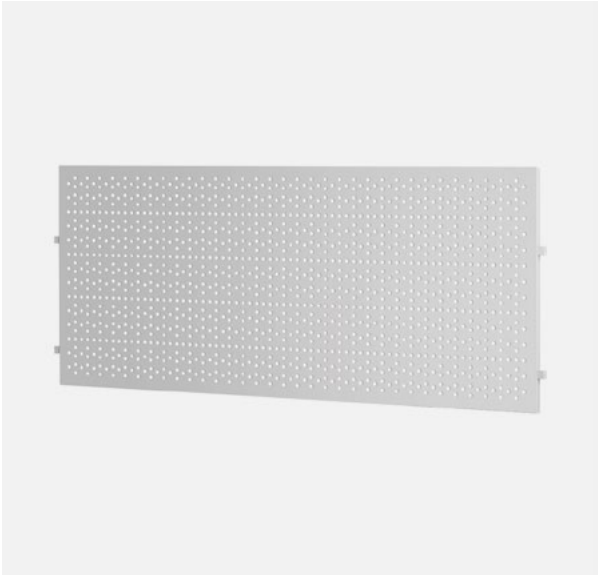

PLASTIC CONTAINERS

Catalogue number	Volume (L)
RF-013-0001-ESD	1,0
RF-013-0038-ESD	3,8
RF-013-0094-ESD	9,4

SUSPENSION RAIL - DIMENSIONS (MM)

Catalogue number	Width	Containers (pcs)
RF-012-0750-9003	750	7 (1L)
		5 (3,8L)
RF-012-0900-9003	900	8 (1L)
		6 (3,8L)

PERFORATED PANEL - DIMENSIONS (MM)

Catalogue number	Width	Height
RF-014-07503-9003	750	300
RF-014-09003-9003	900	300
RF-014-07504-9003	750	400
RF-014-09004-9003	900	400

ACCESSORIES

CPU HOLDER FOR PREMIUM FRAME

It is ideal solution to increase optimum of used workspace, while keeping your computer above the floor thus enables of maintaining workplace and surroundings cleanliness.

CPU HOLDER FOR CLASSIC FRAME

Bracket is mounted to the frame of CLASSIC undercounter construction. Easy and fast assembly without tools, optimizes work area.

UNIVERSAL CPU HOLDER

Compatible with CLASIC, PREMIUM as well as PREMIUM ELECTRIC frame. Width adjustment range: 120 - 195 mm.

CPU HOLDER FOR PREMIUM FRAME - DIMENSIONS (MM)

Catalogue number	Width	Height
RF-025-CHP	215	500

CPU HOLDER FOR CLASSIC FRAME - DIMENSIONS (MM)

Catalogue number	Width	Height
RF-025-CHC	195	650

UNIVERSAL CPU HOLDER - DIMENSIONS (MM)

Catalogue number	Width	Depth	Height
RF-025-CHU	120 - 195	445	460

ACCESSORIES

4 X 1/2" PNEUMATIC STRIP

Made of high quality aluminum. Equipped with mounting brackets. 3/8" or 1/2" input valve. 1/2" output valve.

POWER STRIP 16 A, 6+3 SOCKETS / 9 SOCKETS

Strip has automatic fuse and electronic overvoltage circuit. Length of power cord is 2,5 m.

POWER STRIP WITH SCHUKO SOCKETS

Strip has automatic fuse and electronic overvoltage circuit. Length of power cord is 1,5 m. Sockets with protective contacts.

4 X 1/2" PNEUMATIC STRIP

Catalogue number	Valves
RF-LP1/2G4	4

POWER STRIP 16 A, 6+3 SOCKETS / 9 SOCKETS

Catalogue number	Current (A)	Sockets
RF-LZ16A63G-2.5	16	6/3
RF-LZ16A9G-2.5	16	9

POWER STRIP WITH SCHUKO SOCKETS

Catalogue number	Current (A)	Sockets
RF-LZC8G10A	16	5

ACCESSORIES

LAPTOP SHELF

Easy horizontal, vertical and angular adjustment thanks to triple-jointed arm.

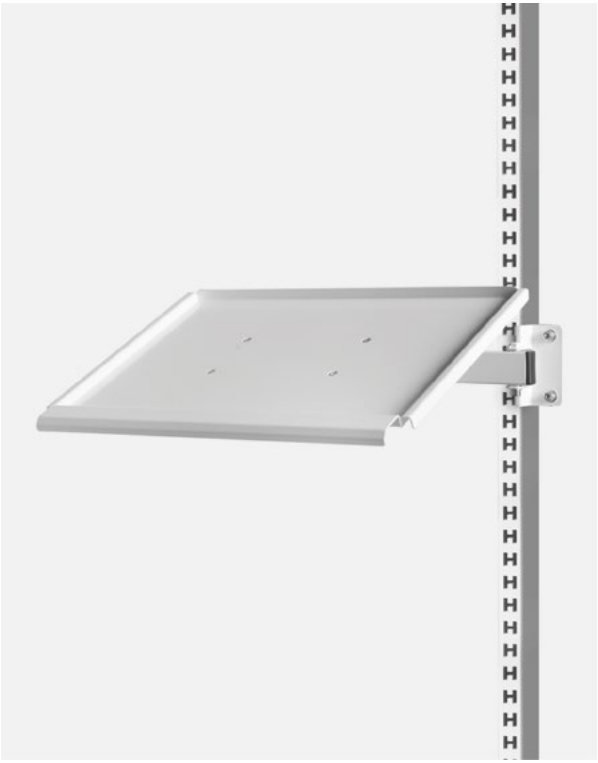

DOCUMENT HOLDER

Double-jointed arm allowing for horizontal and angular adjustment.

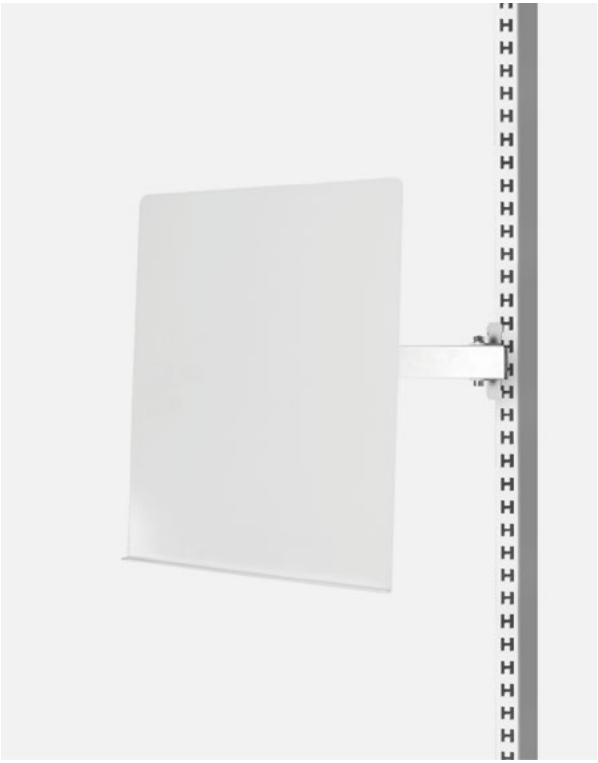

LCD HOLDER

The holder is equipped with a joint, which provides the possibility of horizontal regulation of a monitor. Standard VESA 70-100.

LAPTOP SHELF - INTERNAL DIMENSIONS (MM)

Catalogue number	Width	Depth
RF-025-LH	435	300

DOCUMENT HOLDER

Catalogue number
RF-025-DH

LCD HOLDER

Catalogue number
RF-025-VESA-9003

Reeco.info

ACCESSORIES

PROTECTIVE PANEL

Protective panels are intended only to be mounted on the back side of the PREMIUM or PREMIUM ELECTRIC construction.

PROTECTIVE PANEL - DIMENSIONS (MM)

Catalogue number	Width	Height
RF-026-0750-9009	750	300
RF-026-0900-9009	900	300

CABLE DUCTS - VERTICAL AND HORIZONTAL

Cable ducts, as well as protective panels enables hiding of cables. Intended only to be mounted on perforated frame on the back side of the PREMIUM or PREMIUM ELECTRIC table frame.

CABLE DUCTS - HORIZONTAL AND VERTICAL - DIMENSIONS (MM)

Catalogue number	Type	Length
RF-026H-0750-9003	Horizontal	750
RF-026H-0900-9003	Horizontal	900
RF-026U-1200-9009	Vertical	1200

UTILITY SHELF

Shelf was equipped with different size holes, which enable storage of differently sized tools.

UTILITY SHELF - DIMENSIONS (MM)

Catalogue number	Width	Depth
RF-010N-0300-9003	300	170
RF-010N-0750-9003	750	170
RF-010N-0900-9003	900	170

ACCESSORIES

DRAWER UNIT - 2 DRAWERS

Equipped with central locking system and two drawers of equal height.

DRAWER UNIT - 4 DRAWERS

Equipped with central locking system and four drawers of various height.

WHEELED DRAWER

Drawer unit equipped with 4 swivel wheels and central locking system. Auxiliary table top with limiters on three sides. Two castors equipped with braking system.

DRAWER UNIT - 2 DRAWERS - DIMENSIONS (MM)

Catalogue number	Width	Depth	Height
RF-016-3826-9003	380	520	260

DRAWER UNIT - 4 DRAWERS - DIMENSIONS (MM)

Catalogue number	Width	Depth	Height
RF-016-4567-9003	455	520	640

WHEELED DRAWER - DIMENSIONS (MM)

Catalogue number	Width	Depth	Height
RF-016-4566-9003	455	520	735

ACCESSORIES

TROLLEY WITH HEIGHT ADJUSTABLE TOP

Upper platform made of moist and scratch resistant ESD laminate. Height adjustment range: 665 - 1100 mm. Top dim.: 690 x 480 x 25 mm | Bottom dim.: 410 x 665 x 25 mm

LAPTOP TROLLEY

ESD protected. Height adjustment range: 650 - 1000 mm. Upper platform dimensions: 600 x 450 mm.

MODULAR WORKSHOP TROLLEY

A workshop trolley with a perforated frame, which enables mounting additional accessories, e.g. perforated plates, shelves etc. It has two castors with brakes.

TROLLEY WITH HEIGHT ADJUSTABLE TOP - DIMENSIONS (MM)

Catalogue number	Width	Depth	Height
RF-028-450700-9003	690	480	990

LAPTOP TROLLEY - DIMENSIONS (MM)

Catalogue number	Width	Depth	Height
RF-025-WZL	600	450	1000

MODULAR WORKSHOP TROLLEY - DIMENSIONS (MM)

Catalogue number	Width	Height
RF-024-0750-9003	750	1555
RF-024-0900-9003	900	1555

ACCESSORIES

ESD WASTE BIN

Leveling feet. Self-closing lid. Easy waste bag installation and replacement. Oblique design, front door locked with a key.

ESD WASTE BIN - DIMENSIONS (MM)

Catalogue number	Width	Depth	Height
RF-097-PS01-120	355	355	1007

SLIDING PIECE

Made of galvanized steel and rolling bearings. Travel speed of trolley is 80m/min, and its maximum load capacity is 20 kg.

SLIDING PIECE

Catalogue number
RF-023-WK-S1

FOOTREST

The freestanding footrest increases the ergonomics and comfort of the operator's work. Its height and angle are adjustable.

FOOTREST - DIMENSIONS (MM)

Catalogue number	Width	Depth	Height
RF-021-FR	600	420	370

Reeco.info

ESD CHAIRS

PREMIUM-S ANTISTATIC CHAIR

- Maximum load: 150 kg
- Five - pointed base made of polished aluminum
- ESD armrests as standard
- Back made of high quality foam, contoured shape of the back
- Fabric color: navy blue

Catalogue number
RE-PREMIUM-S

COMFORT-C ANTISTATIC CHAIR

- Maximum load: 150 kg
- Five - pointed base made of polished aluminum
- Back made of high quality foam, contoured shape of the back
- Fabric colour: navy blue, gray

Catalogue number
RE-COMFORT-C

SOLO 10A ANTISTATIC CHAIR

- Five - pointed base made of polished aluminum
- Adjustable seat height from 465 - 550 mm
- Ergonomic, profiled seat made of multilayer hardwood plywood, covered with polyurethane foam (PU)
- Fabric colour: black

Catalogue number
RE-SOLO10A

ESD CHAIRS

SOLO 20A ANTISTATIC CHAIR

- Laboratory chair
- Five - star shaped base - high durability and stability
- Adjustable seat height from 465 - 550 mm
- Non - slip seat surface made of soft, profiled black plastic (PU)
- Colour: black

Catalogue number
RE-SOLO20A

ARMREST FOR CHAIR

Armrest for chairs:
- COMFORT-C
- SOLO 10A
- SOLO 20A

Catalogue number
RE-SOLO10A-AR

FOOTREST FOR CHAIR

Footrest for chairs:
- PREMIUM-S
- COMFORT-C
- SOLO 10A
- SOLO 20A

Catalogue number
RE-SOLO10A-FR

Reeco

Reeco

Reeco
Reeco

Reeco

Reeco
Reeco

SAMPLE CONFIGURATIONS

Catalogue number
RF-P301

Catalogue number
RF-P302

Reeco.info

SAMPLE CONFIGURATIONS

Catalogue number
RF-P303

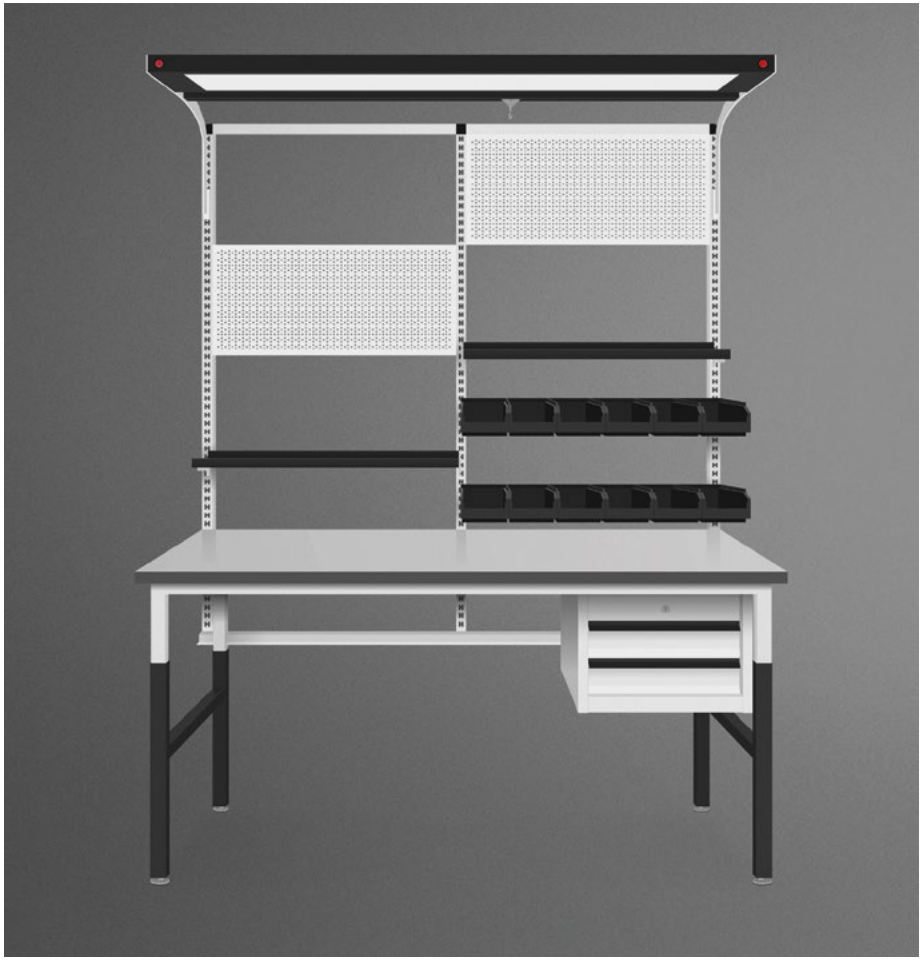

Catalogue number
RF-C311

SAMPLE CONFIGURATIONS

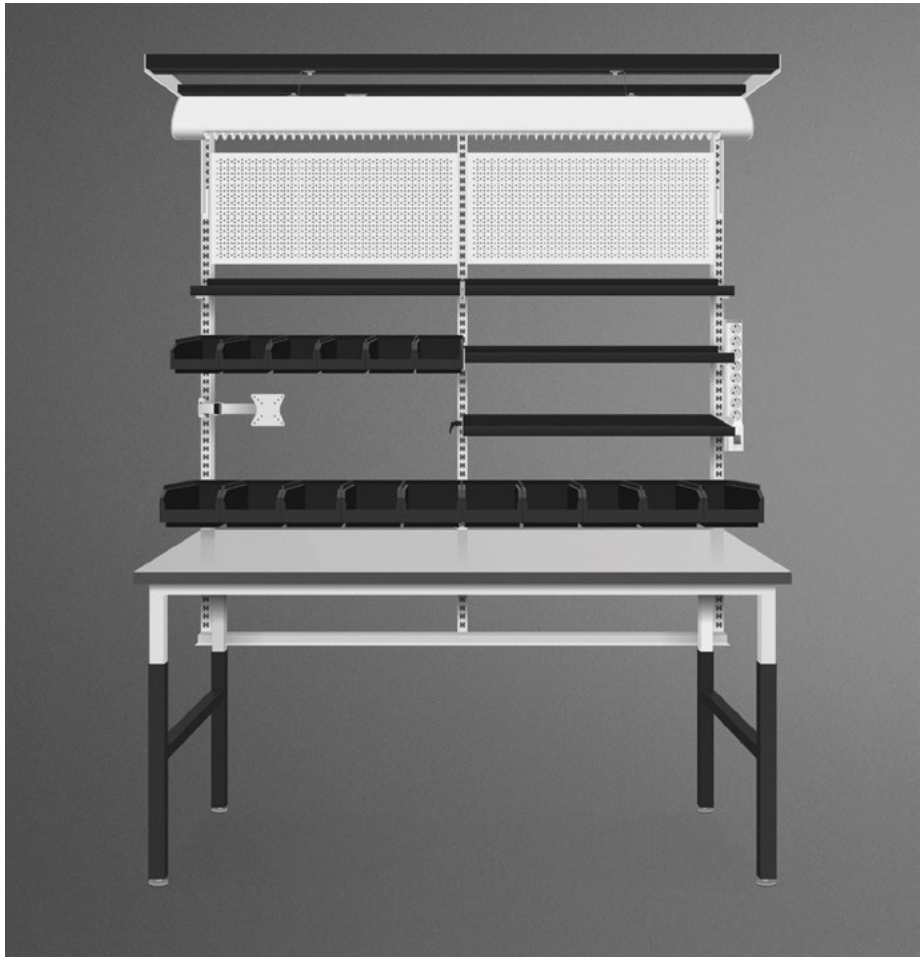

Catalogue number
RF-C312

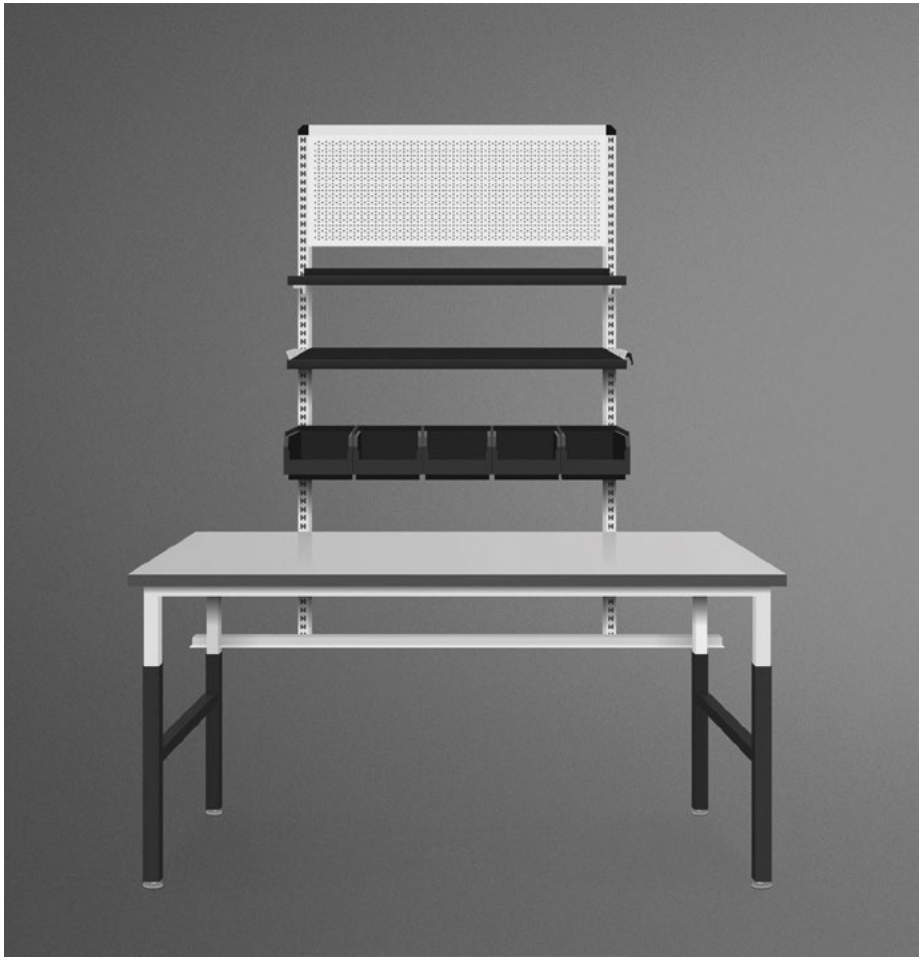

Catalogue number
RF-C313

Reeco.info

SAMPLE CONFIGURATIONS

Catalogue number
RF-C314

Catalogue number
RF-C315

Reeco